DK-07 Series 重型調整防震腳座 Heavy-Duty Anti-Vibration Leveling Feet

DK-0716110U



單支荷重 1700Kgf
Load Capacity 1700Kgf / each

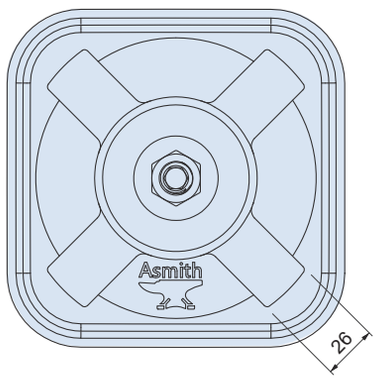

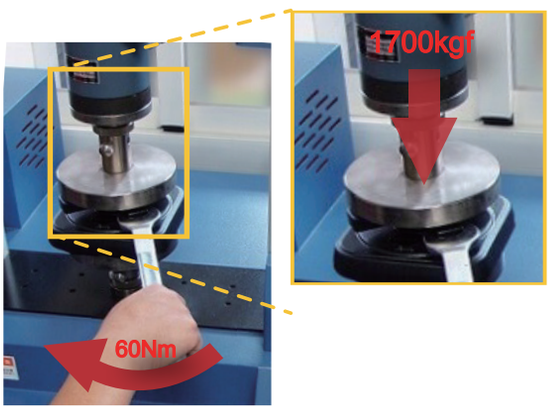

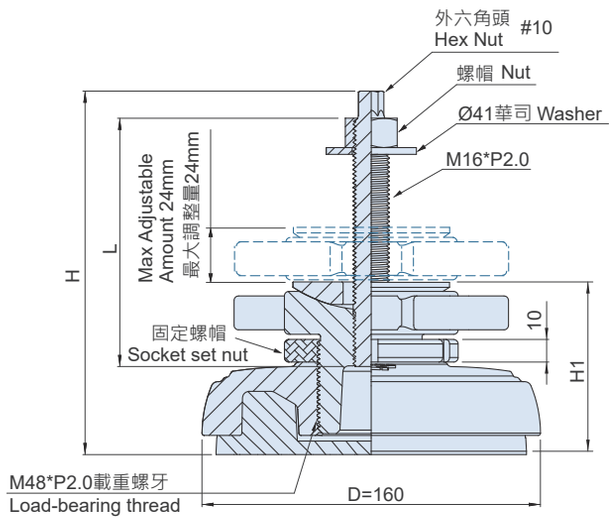

材質與表面處理

- 盤座：FC-250 粉體烤漆(砂黑)
- 螺桿：S45C 熱處理及磷酸錳
- 盤墊：CR 合成橡膠(黑)
- 固定螺帽：FCD45 粉體烤漆(砂黑)

特徵

- 高度與水平調整：在1700kgf 負荷情況下，仍可使用開口板手施力60Nm旋轉十字調整盤座，輕鬆調整高度與水平。(如上圖所示)
- 自動水平導正：當地面傾斜或不平整時，腳座可自動導正水平角度，使盤墊面完整貼合地面，有效提升機械安裝穩定性與運轉精度。
- 防震性能：有效吸收機械運轉所產生之震動，避免共振與引震現象，顯著降低噪音，改善作業環境並提升設備壽命與精度。
- 防滑與耐用性：具備防滑、防震、耐磨損、耐油特性。
- 防火等級：腳座材料符合UL94 V0防火等級標準。
- 固定螺帽設計：可選配固定螺帽。建議在高震動環境中使用，以防止調整盤座因振動鬆動，確保長時間穩定運作。

MATERIAL AND FINISH

- Base: FC-250 Powder coating (Black)
- Bolt: S45C with heat treatment and coating with Manganese phosphate
- Cushion: Chloroprene Rubber (Black)
- Socket Set Nut: FCD45 Powder coating (Black)

FEATURES

- Height & Level Adjustment: With 1700 kgf load, apply 60 Nm torque to the cross handle with an open-end wrench to adjust height and level easily. (Please refer to the photo above.)
- Auto Horizontal Correction: When the floor is uneven, leveling feet automatically adjust the horizontal angle to ensure full contact, improving installation stability and machine precision.
- Vibration Control: Effectively absorbs vibration to prevent resonance and transmission, reducing noise, improving the work environment, and extending equipment life.
- Slip and Wear Resistance: Resistant to shock, slip, abrasion, and greasiness.
- Fire Rating: Leveling feet meet UL94 V0 fire resistance standard.
- Socket Set Nut Option: Optional socket set nut. Recommended for high-vibration environments to prevent loosening and ensure long-term stability.

SPECIFICATION:

Unit: mm

形式 Type	產品編號 Item no.	尺寸 Dimensions				機械腳厚度允許最大值 Max. Thickness of Machine Support	最大調整量 Max. Adjustable Amount	荷重 Load Capacity (kgf)	重量 Weight (kg)
		D	L	H	H1				
含固定螺帽 With socket set nut	DK-0715110U	160	110	161	75	55	24	1700	4.8
	DK-0715200U		200	251		145			4.9
不含固定螺帽 Without socket set nut	DK-0716110U		110	151	65	55			4.6
	DK-0716200U		200	241		145			4.7

※Note : Before the installation, the mechanical foot please do not tapped hole.

※注意事項：安裝前，機械腳請勿攻牙。

與機械組裝時
(When assembling with the machine.)

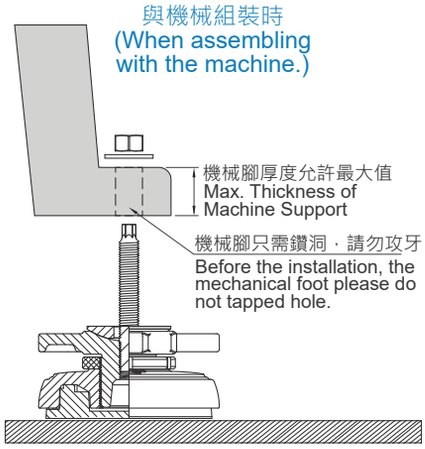

與機械組裝完成
(Complete with the machinery assembly)

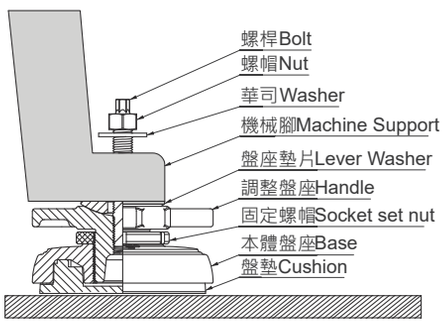

水平調整完成後
(After the adjustment level complete)

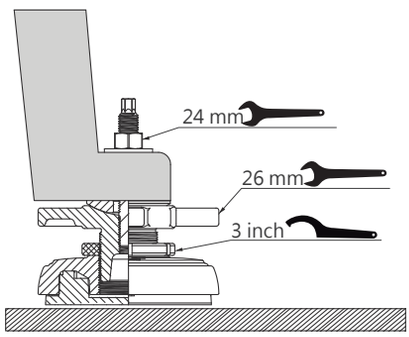

使用說明

- 將盤座墊片放在腳座上，再將機械緩緩降下。(安裝前，機械腳只需鑽洞，請勿攻牙。)
- 螺桿由上側穿過機械腳及盤座墊片鎖入調整盤座中，再由上放入華司和螺帽。
- 用26mm開口扳手轉動調整盤座，調整出機械適當的高度及水平。
- 完成後將上方華司和螺帽鎖緊。

User Manual

- Place the level washer on the glide then lower down machine slowly. (Before the installation, the mechanical foot please do not tapped hole.)
- Insert the bolt through the machine into the glide then place the nut and washer from the top.
- To adjust machine to its height with the handle by the wrench(26mm).
- To tie the nut and washer when the adjustment is done accurately.

《測試結果．RESULT》

為隔振前(無隔振腳墊)
Before the Vibration isolation (without Cushion)

為隔振後(有隔振腳墊)
After the Vibration isolation (with Cushion)

1. X方向隔振前(無隔振腳墊)與隔振後(有隔振腳墊)之加速度

1. X direction before the Vibration isolation (without Cushion) and after the Vibration isolation (with Cushion) of the acceleration.

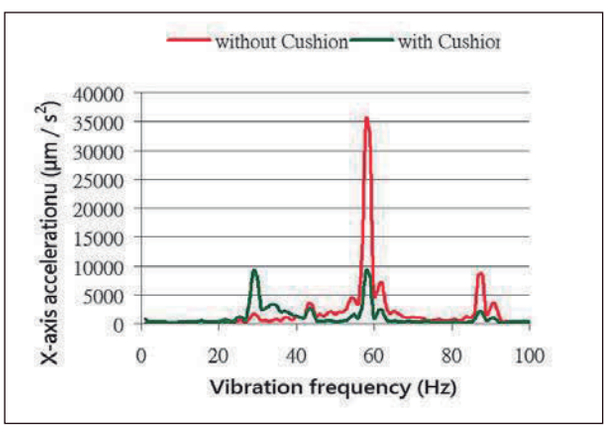

3. Z方向隔振前(無隔振腳墊)與隔振後(有隔振腳墊)之加速度

3. Z direction before the Vibration isolation (without Cushion) and after the Vibration isolation (with Cushion) of the acceleration.

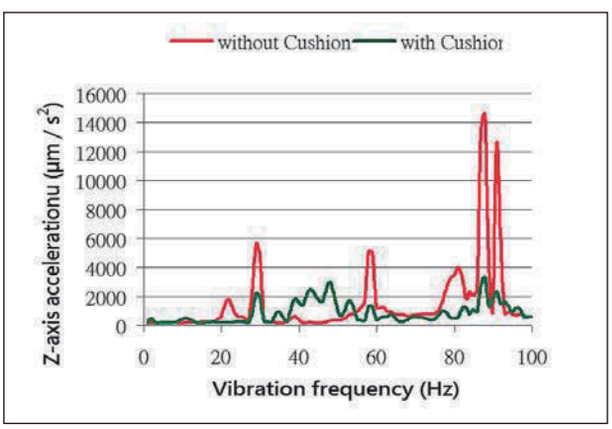

2. Y方向隔振前(無隔振腳墊)與隔振後(有隔振腳墊)之加速度

2. Y direction before the Vibration isolation (without Cushion) and after the Vibration isolation (with Cushion) of the acceleration.

